SERVICE MANUAL

AUDIO MIXER

SANSUI AX-7

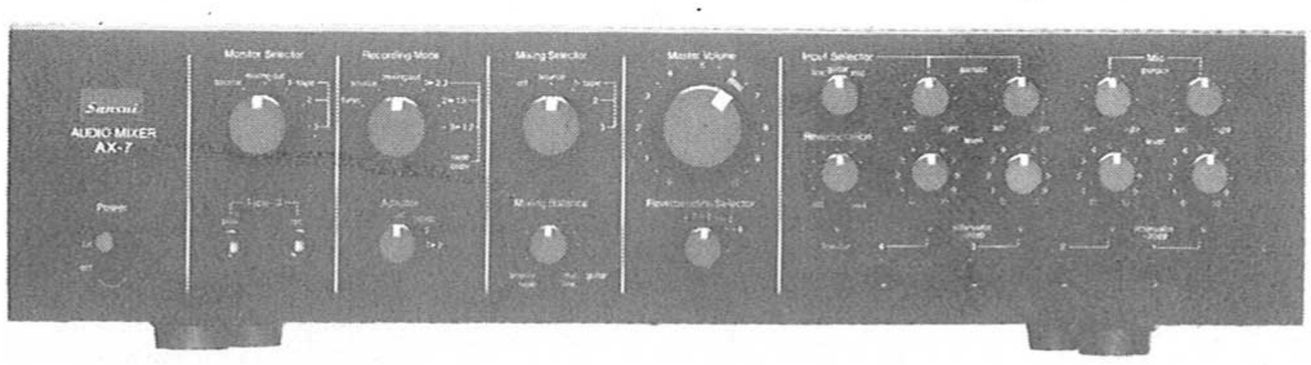

Sansui

SANSUI ELECTRIC CO., LTD.

SPECIFICATIONS

Output voltage (at 1kHz, less than 0.1% total harmonic distortion)
- OUTPUT 1V
  (Max. output voltage 5V)
- TAPE REC 1V

Total harmonic distortion (20 to 20,000Hz, for rated output voltage) . . . . less than 0.1%

Frequency response
- SOURCE IN, TAPE PLAY
  . . . . . 20 to 20,000Hz +0dB −0.5dB
- MIC, GUITAR, LINE. 20 to 20,000Hz +0dB −1.0dB

Input sensitivity and impedance (1kHz)
- MIC . . . . . 1mV/47 kilohms
  (Max. input capability, 40mV at 1kHz, less than 0.1% total harmonic distortion)
- GUITAR . . . . . 20mV/47 kilohms
- LINE, SOURCE IN, TAPE PLAY
  . . . . . 150mV/47 kilohms

Hum and noise
- MIC 57dB
- GUITAR 55dB
- LINE 66dB
- SOURCE IN 72dB

Filter
- LOW CUT . . . . . −3dB (200Hz), 6dB/oct.

Power requirements
- Power voltage 100, 120, 220, 240V (50/60Hz)
  For U.S.A. & Canada
  . . . . . 120V (60Hz)
- Power consumption . 3 watts

Dimensions . . . . . 482mm (19") W
110mm (4-3/8") H
299mm (11-13/16") D

Weight . . . . . 5.3kg (11.7 lbs) net
6.3kg (13.9 lbs) packed

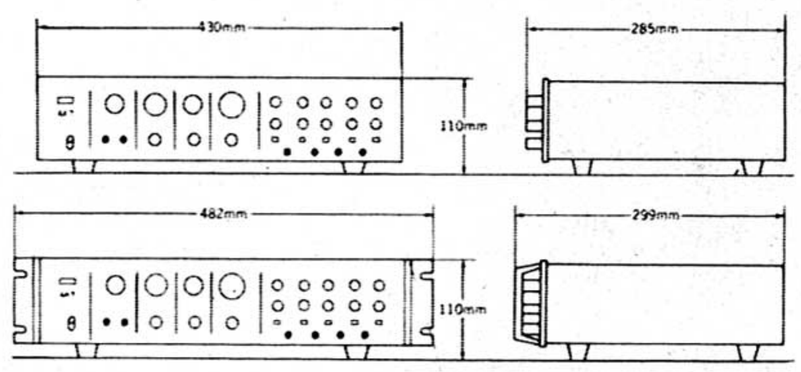

* Design and specifications subject to changes without notice for improvements.

* In order to simplify the explanation illustrations may sometimes differ from the originals.

www.hifiengine.com

1. BLOCK DIAGRAM

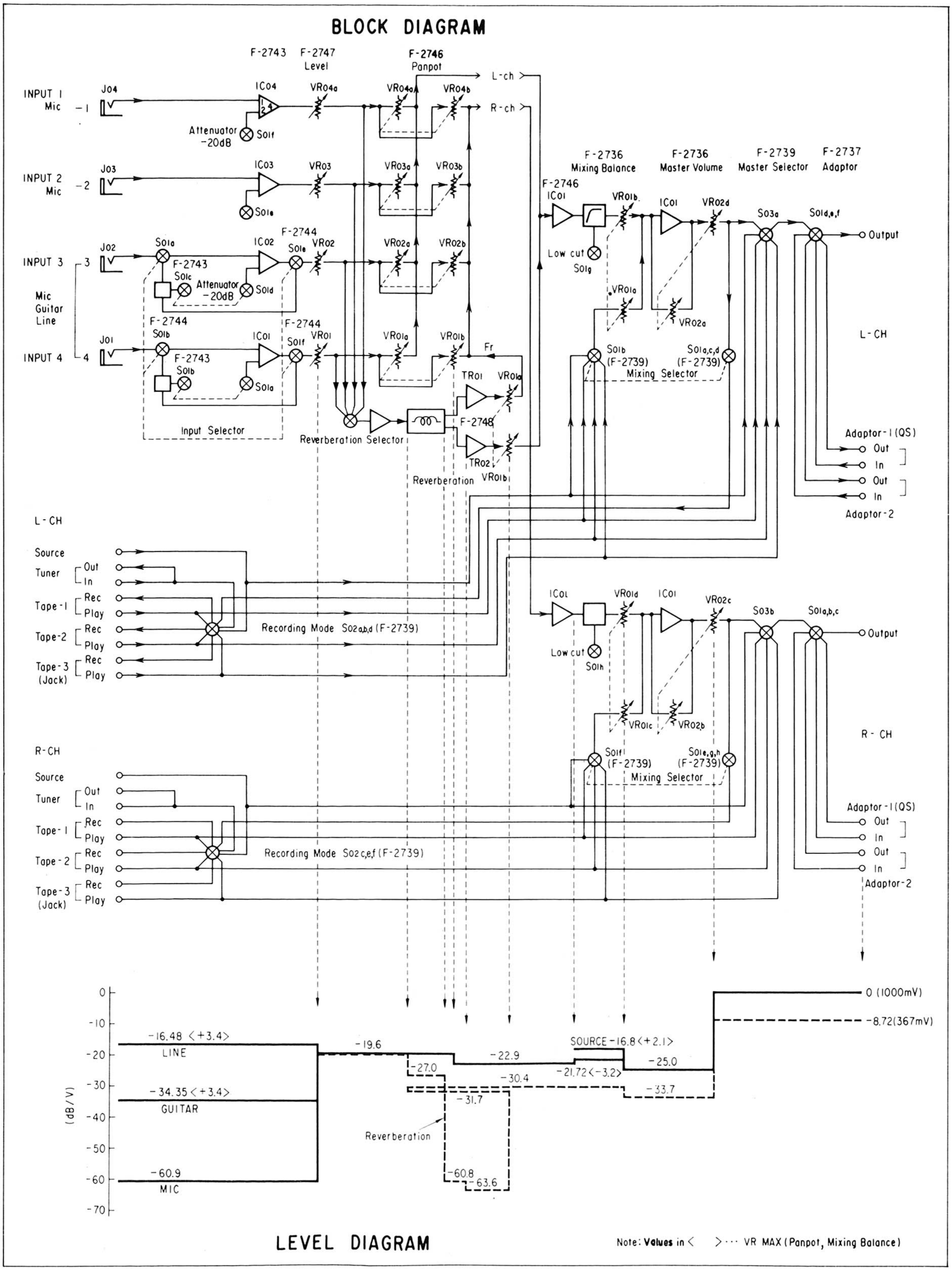

2. OPERATION OF EACH SELECTOR

The list shown below indicates the relation between input and output when turning over the selector switches. In the list, the mark ⊖ shows outputs passing through Master volume and the Mark ○ signifies outputs by-passing Master volume and comes directly from input terminal to output terminal.

For Instance:
When input signal comes from tuner at recording mode, a signal by-passing Master volume is appears at output terminal of Tape 1 Rec (Printed ● in the list below) only when the selector position is Recording Mode 1, in addition, output signal appears in any Mixing Selector position.

1) Recording mode switch

Input Terminl	Mixing Selector	Recording Mode Position																							
		1. Tuner 5. Tape 2→1, 3						2. Source 6. Tape 3→2, 1						3. Mixing out						4. Tape 1→2, 3					
		1	2	3	4	5	6	1	2	3	4	5	6	1	2	3	4	5	6	1	2	3	4	5	6
Mic Guitar Line	off	⊖	⊖	⊖	⊖	⊖	⊖			⊖						⊖						⊖			
	Source	⊖	⊖	⊖	⊖	⊖	⊖			⊖						⊖						⊖			
	Tape 1	⊖	⊖	⊖	⊖	⊖	⊖									⊖						⊖			
	Tpae 2	⊖	⊖	⊖	⊖	⊖	⊖			⊖												⊖			
	Tape 3	⊖	⊖	⊖	⊖	⊖	⊖			⊖						⊖									
Tuner	off							○						○						○					
	Source							○						○						○					
	Tape 1							●						○						○					
	Tape 2							○						○						○					
	Tape 3							○						○						○					
Source	off								○						○						○				
	Source	⊖	⊖	⊖	⊖	⊖	⊖		○	⊖					○	⊖					○	⊖			
	Tape 1								○						○						○				
	Tape 2								○						○						○				
	Tape 3								○						○						○				
Tape 1 play	off																○						○		
	Source																○						○		
	Tape 1	⊖	⊖	⊖	⊖	⊖	⊖									⊖	○					⊖	○		
	Tape 2																○						○		
	Tape 3																○						○		
Tape 2 play	off											○												○	
	Source											○												○	
	Tape 1											○												○	
	Tape 2	⊖	⊖	⊖	⊖	⊖	⊖			⊖		○										⊖		○	
	Tape 3											○												○	
Tape 3 play	off												○						○						
	Source												○						○						
	Tape 1												○						○						
	Tape 2												○						○						
	Tape 3	⊖	⊖	⊖	⊖	⊖	⊖			⊖			○			⊖			○						
		Out						Tape 1 Rec						Tape 2 Rec						Tape 3 Rec					
		Output Terminal																							

2) Reverberation selector switch

Input Terminal	Reverberation Selector			
	1	1, 2	1~3	1~4
Mic 1	○	○	○	○
Mic 2		○	○	○
Mic 3			○	○
Mic 4				○
	Right (Left) Out			

3) Monitor selector switch

Input Terminal	Monitor Selector Position				
	Source	Mixing Out	Tape 1	Tape 2	Tape 3
Mic Guitar Line		⊖			
Source	○	⊖			
Tape 1			○		
Tape 2				○	
Tape 3					○
	Output				

4) Adaptor switch

Input Terminal	Adaptor	Output Terminal		
		Adaptor 1	Adaptor 2	Out
Source	off			⊖
	1 (QS)	⊖		
	2		⊖	
	1→2	⊖		
Adaptor 1	off			
	1 (QS)			○
	2			
	1→2		○	
Adaptor 2	off			
	1 (QS)			
	2			○
	1→2			○

www.hifiengine.com

3. FUNCTIONS

1) Input circuit

The input circuit is provided with the input jacks 1, 2, 3, and 4 on the front panel. The inputs, 1 and 2 are connected to the input circuit directly as shown in Block Diagram on page 1 (input sensitivity 1 mV/47 kΩ) designed to be used for Microphones, and the inputs, 3 and 4 are used for Microphone, Guitar and Line inputs (input sensitivity 1 mV, 20 mV, 150 mV/47 kΩ respectively), which can be switched over in accordance with the purpose of use. Therefore, this model, AX-7, can be operated always in the proper condition by changing over the input sensitivity to meet each application.

2) Input attenuator

This attenuator of −20 dB is equipped on the first stage of input circuit shown in the Block Diagram, thereby the input signal is attenuated −20 dB before the first stage of amplifier, which prevent an excessive clipped input signal into the amplifier directly. Consequently, the dynamic range of the amplifier can be utilized to the full.
The attenuator works at each position of the input sensitivity changeover of the input 3 and 4, therefore, this set, AX-7, can be applied to further various input levels by the combination of switching ON the attenuator and the input sensitivity changeover (= of switching OFF the attenuator).

	INPUT SENSITIVITY	
	RATING	−20dB ATT IN
MIC	1mV	10mV
GUITAR	20mV	200mV
LINE	150mV	1500mV

3) Input level adjustment

Each level of the inputs 1, 2, 3 and 4 can be individually adjusted by the level volume control provided for left & right channels, which permits the use of Microphones with different sensitivities and also the individual level variation of Guitar, Line inputs, 3 and 4. In other words, the input levels can be adjusted in the best balance because input signal level of each channel, 1, 2, 3 & 4 can be controlled by the independently equipped volume control.

4) Panpot function

This audio mixer, AX-7, has Panpot function which localizes, as you desire, the sound image of monophonic sound by signal given to input 1, 2, 3 or 4 between speakers L and R. Namely, this function allows to move the sound image as monaural sound continuously from one position to another between speakers, L and R during stereo reproduction. Therefore, the sound of each input signal into inputs, 1, 2, 3 & 4 can be moved desired sound-image localization between speakers, left and right by use of these function volumes, monitoring the reproduced stereo sound by signals given to L and R input terminals.

5) Reverberation function

A reverberation unit applying spring elasticity to this function is built in this AX-7, and the reverberation time can be varied as required within the range from 1.9 to 3.2 seconds. A reverberation unit produces echo sound of one or move combined as 1, 1 and 2, 1 to 3 and 1 to 4 against the signals provided into inputs, 1, 2, 3 and 4 on the front panel.

6) Low cut filter

When the frequency response extends too far into low-frequency band at public address, the separation of individual sound becomes worse. Even though low band is cut by this filter, sound quality is not harmed.

7) Master volume control

The levels of signals from individual inputs, 1, 2, 3 & 4 adjusted by level volume and mixed by mixing selector are totally controlled by Master volume control. As the levels are adjusted under condition that the sound images are localized between speakers, left and right by means of the panpot function, the position of sound image between two speakers does not change, even though the sound levels are varied by master volume control.
Also, this volume control works only at mixing-out position of monitor selector, and markings are provided between the positions, 6 to 6.5 of this control to get same sound level comparing to that from the source input terminal.

8) Recording mode

Three tape inputs, Tape-1, -2, -3 are provided, which permit simultaneous recording with three tape decks and tape dubbing from one deck to other. Irrelevant to the mixing-out position, recording of program sources such as FM broadcasting and discs, or tape dubbing from one to two decks can be performed. At the mixing-out position, the output signal controlled by the master volume is directly delivered to the REC terminals via recording mode switch.

9) Adaptors

Other adaptors (e.g. QS synthesizer, meter or equalizer amplifier etc.,) can be connected in series between integrated stereo amplifier and this AX-7. Two adaptors can be connected in series at the position, 1 → 2 of adaptor switch.

10) Mixing Selector

This is a selection switch for mixing the signals of inputs, 1, 2, 3 and 4 with signal of the source from one of tape inputs, Tape-1, -2 or -3.
When mixing play is not needed and only input signals from input 1, 2, 3 & 4 are to be outputted, the off-position of this mixing selector is used.

11) Mixing Balance

This control has the function to get the same levels between signal selected by the mixing selector and input signals from Inputs, 1, 2, 3 & 4 on the front panel.
By turning this balance volume clockwise or counterclockwise fully, either signal from source inputs, tuner, tape-1 to tape-3 or one from input-1, -2, -3 & -4 (mic, guitar, line) remains.

12) Monitor Selector

This has the function to select output signal against input signals. At the source position, the signal from source input is directly given to OUTPUT terminals on rear panel. At the mixing-out position, the output signal balanced by the mixing balance control is delivered to the OUTPUT terminals. At this position, the master volume control functions, therefore, the total sound levels are controlled by the master volume control. And at the positions of Tape-1, Tape-2 & Tape-3, the output signal of each tape deck is directly sent to OUTPUT terminals.

www.hifiengine.com

4. PARTS LOCATION & PARTS LIST

Since some of capacitors and resistors a omitted from parts lists in this Servi Manual, refer to the common parts list f capacitors & resistors which was appende previously to each Sansui Manual.

1) F-2743 MIC AMP Circuit Board (Stock No. 7610171)

Conductor Side

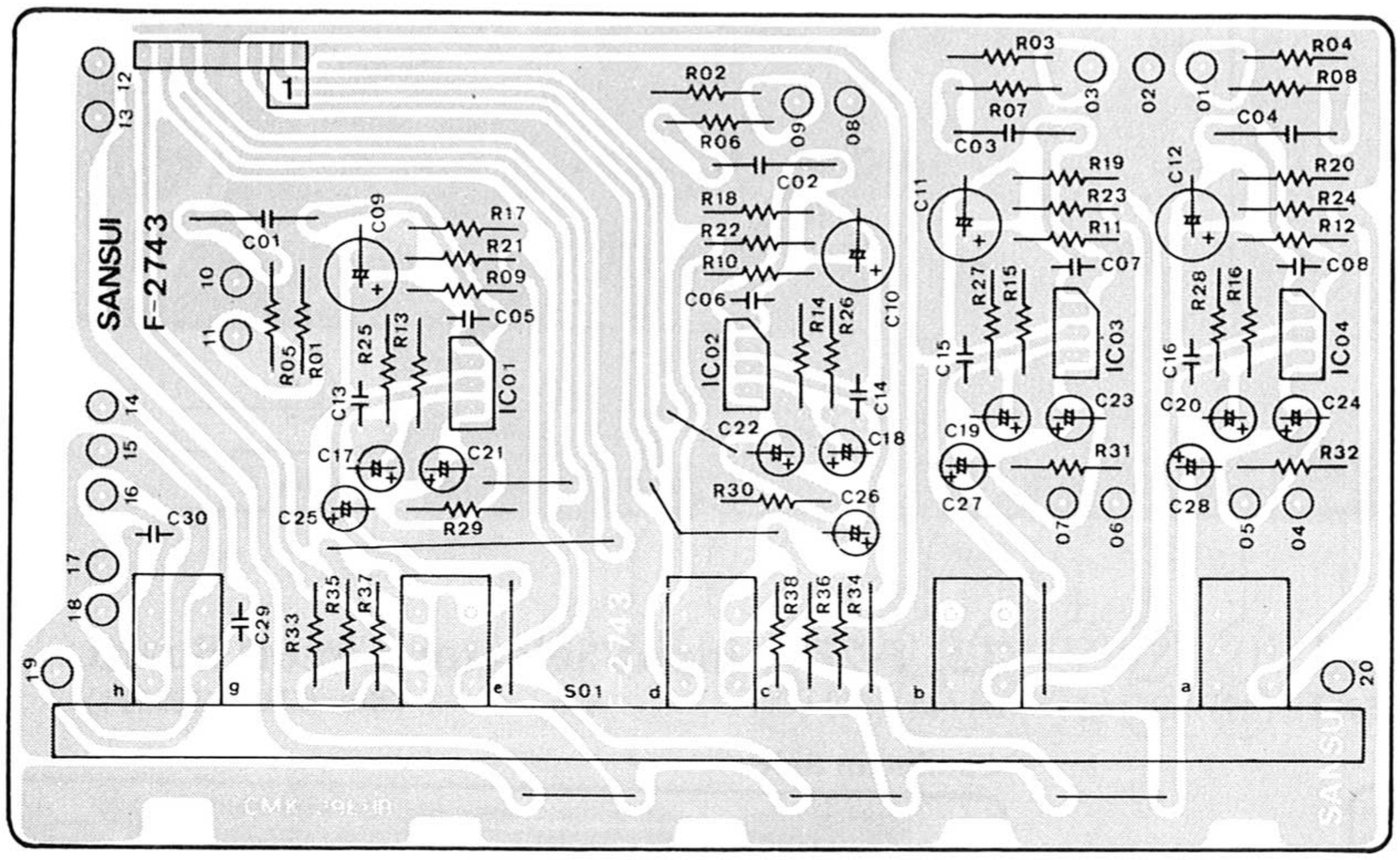

Parts List

Parts No.	Stock No.	Description	
IC01 ~04	0360550	ML120	IC
C01 ~04	0602338	0.33 μF	100V M.C.
S01	1131480	Low Cut Switch	

2) F-2748 Reverberation Circuit Board (Stock No. 7595551)

Conductor Side

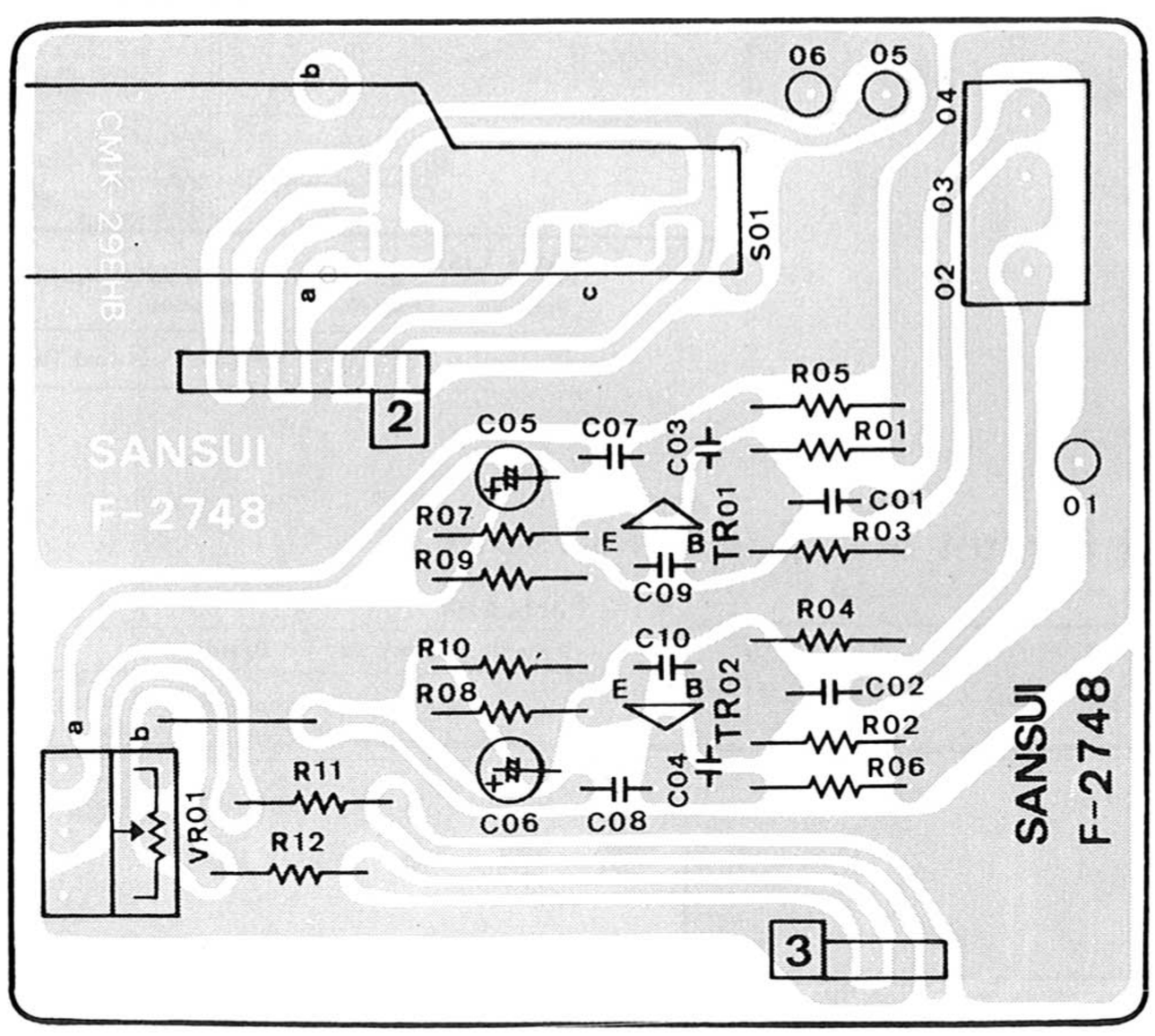

Parts List

Parts No.	Stock No.	Description
TR01, 02	0306010, 1	2SC1222(2) U, E
VR01	1015290, 1	50 kΩ B x 2
S01	1190450	Reverbration Selector Switch
	2410920	Type E 3P Pin Ass'y

3) F-2745 MIC Jack Circuit Board (Stock No. 7595541)

Conductor Side

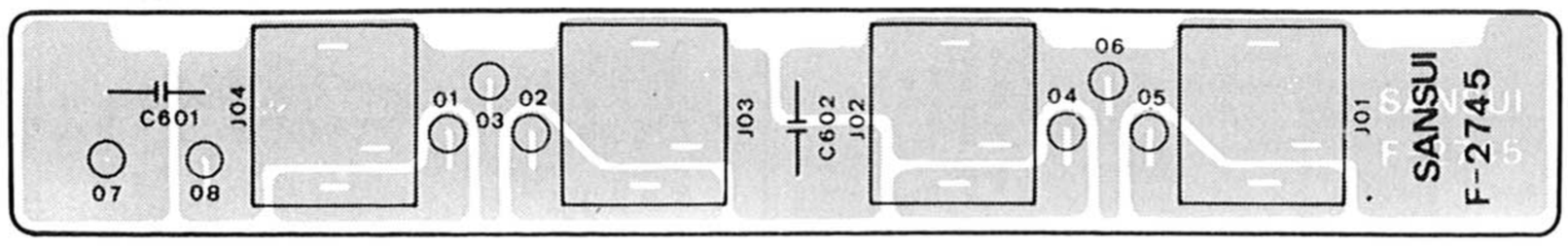

Parts List

Parts No.	Stock No.	Description	
J01 ~04	2430310	S-G7637	Jack

www.hifiengine.com

4) F-2746 Panpot Circuit Board (Stock No. 7562001)

5) F-2747 Level Volume Circuit Board (Stock No. 7562011)

Conductor Side

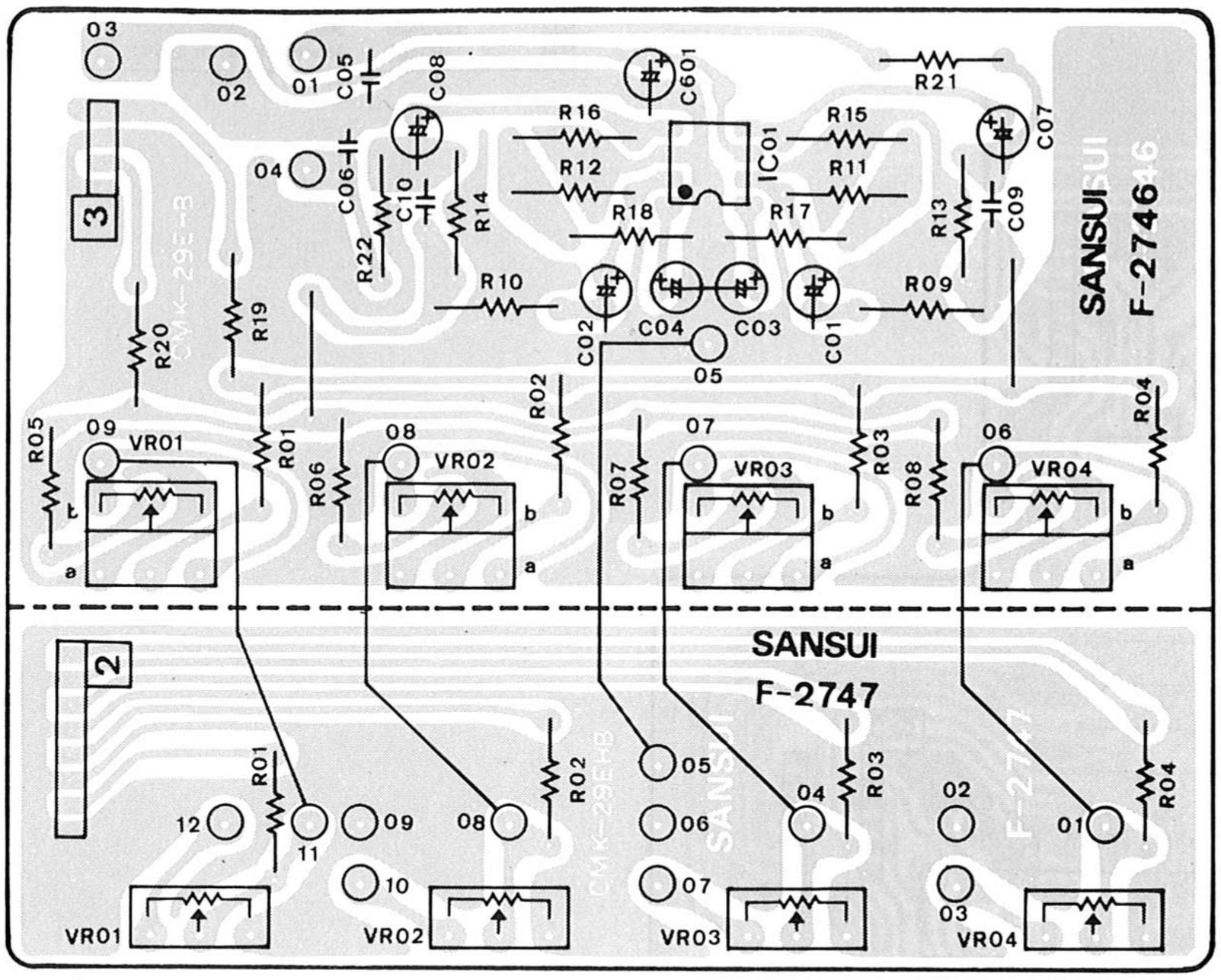

Parts List <F-2746>

Parts No.	Stock No.	Description	
IC01	0360580	NE5421	IC
	0360600	LM-387A	
VR01 ~04	1015280	250 kΩ	A.C.

Parts List <F-2747>

Parts No.	Stock No.	Description	
VR01 ~04	1005320	100 kΩ B	Level Volume
	1005321	100 kΩ B	

6) F-2736 Volume Circuit Board (Stock No. 7561981)

Conductor Side

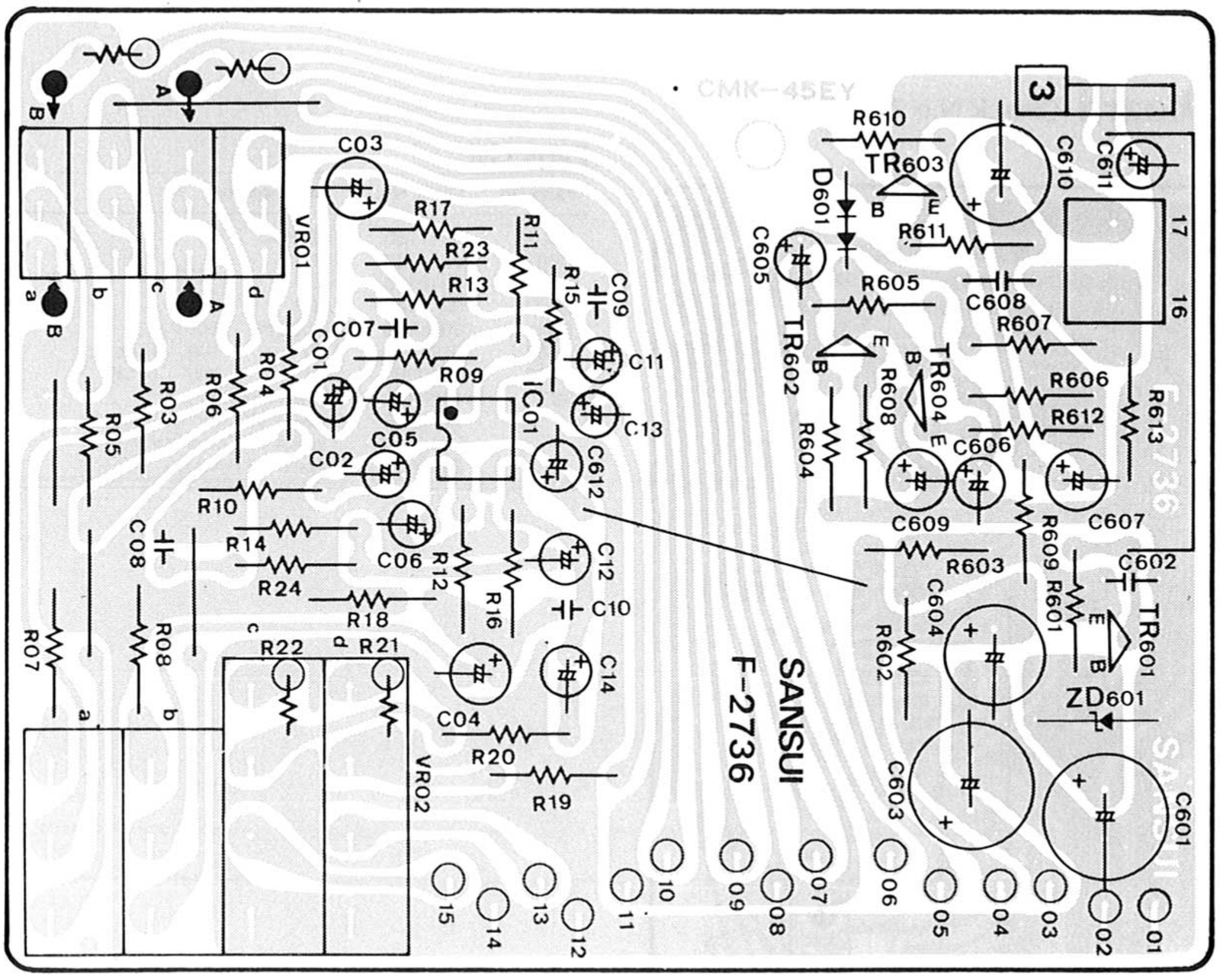

Parts List

Parts No.	Stock No.	Description	
TR601	0306131, 2	2SC1364	6, 7
TR602	0305951, 2	2SC945	Q, P
TR603	0305951, 2	2SC945	Q, P
TR604	0300510, 1	2SA733	P, Q
IC01	0360580	NE5421	IC
	0360600	LM-387A	
D601	0340120	VD1212	Varistor
R602	0210151	150Ω ½W	N.I.R.
R603	0210151	150Ω ½W	N.I.R.
VR01	1065070	50 kΩ A.C x 2	
VR02	1060470	(50 kA x 2) + (10 kB x 2)	
	2410910	Type E 2P Pin Ass'y	

www.hifiengine.com

7) F-2739 Mixing Circuit Board (Stock No. 7561991)

Conductor Side

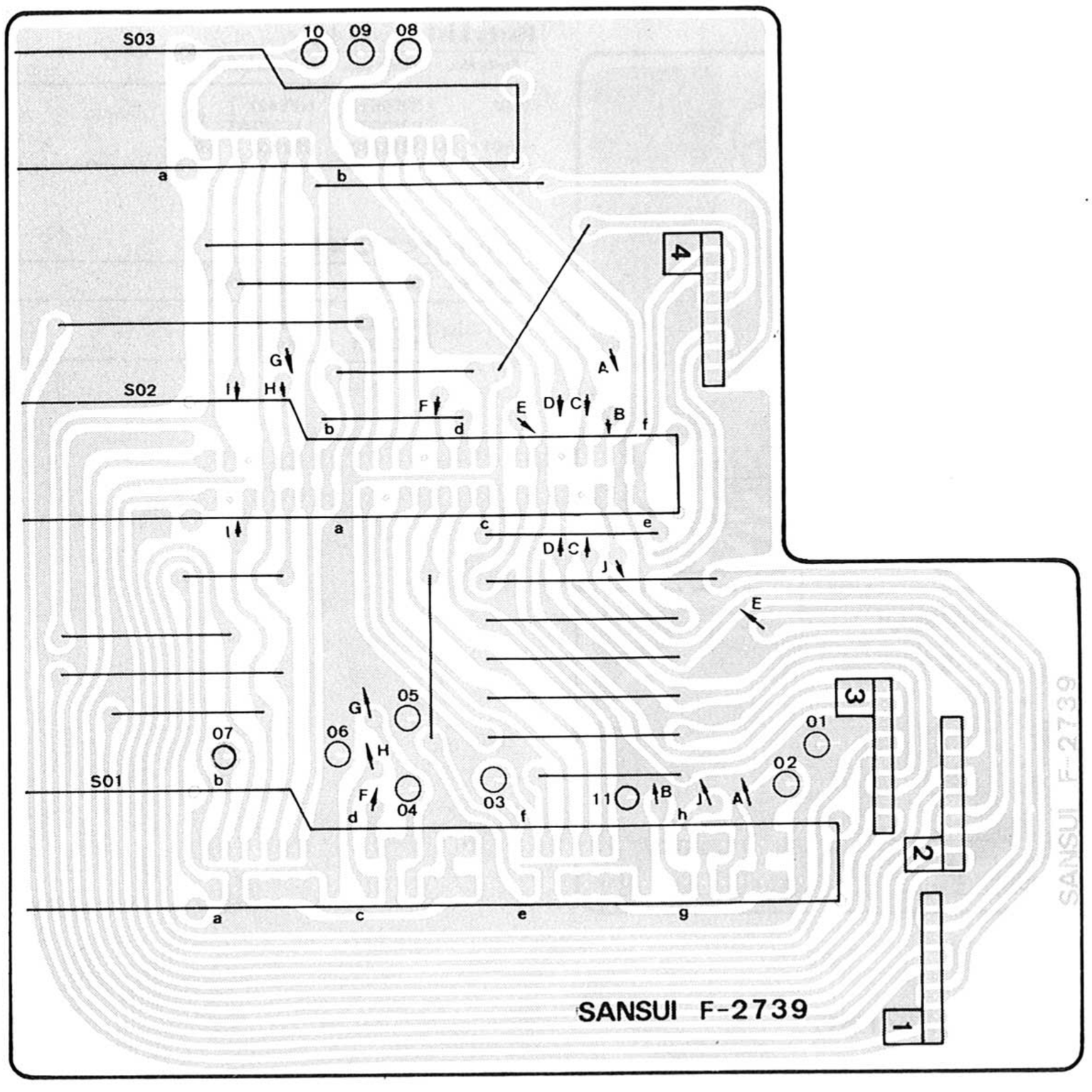

Parts List

Parts No.	Stock No.	Description
S01	1190500	Mixing Selector Switch
S02	1190490	Recording Mode Switch
S03	1190460	Monitor Selector Switch

8) F-2737 Power Supply Circuit Board (Stock N.o 7502521)

Conductor Side

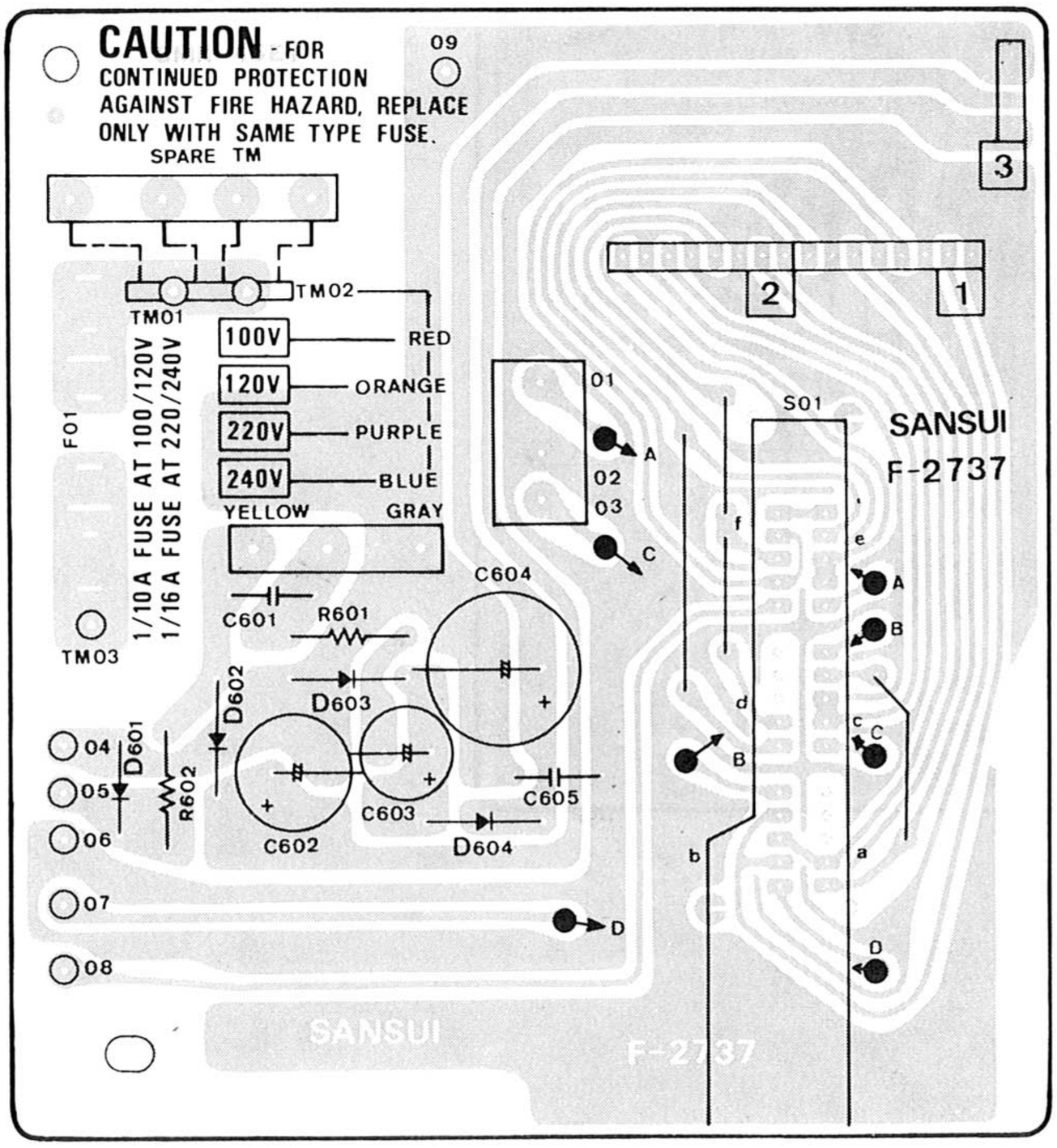

Parts List

Parts No.	Stock No.	Description		
D601	0311160	1S2473D		
D602	0310340	10D1	Diode	
D603	0310340	10D1		
D604	0310340	10D1		
C601	0655103	10,000 pF	500V	C.C.
R601	0191100	10Ω	¼W	Fuse R.
R602	0210561	560Ω	½W	N.I.R.
S01	1190480	Adaptor Switch		
	2410610	Type A 4P Connector Ass'y		
	2410620	Type A 6P Connector Ass'y		
	2410920	Type E 3P Pin Ass'y		

Abbreviations

C.R.	Carbon Resistor	E.C.	Electrolytic Capacitor
S.R.	Solid Resistor	BP.E.C.	Bi-Polar Electrolytic Capacitor
Ce.R.	Cement Resistor	C.C.	Ceramic Capacitor
M.R.	Metal Film Resistor	Mi.C.	Mica Capacitor
F.R.	Fusing Resistor	O.C.	Oil Capacitor
N.I.R.	Non-Inflammable Resistor	P.C.	Polystyrene Capacitor
M.C.	Mylar Capacitor	T.C.	Tantalum Capacitor

www.hifiengine.com

9) F-2738 Adaptor Input & Output Circuit Board (Stock No. 7595491)

Conductor Side

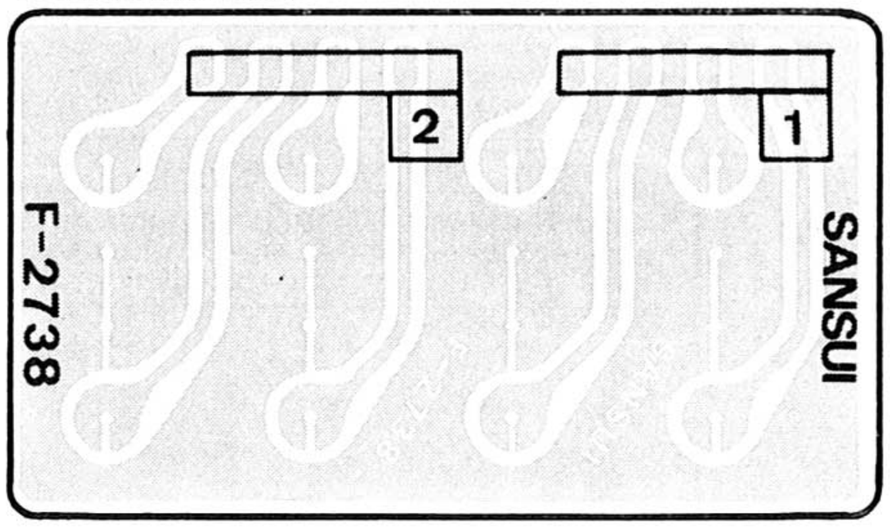

Parts List

Parts No.	Stock No.	Description
	2200480	8P Input & Output Terminal

10) F-2740 Input & Output Circuit Board (Stock No. 7595551)

Conductor Side

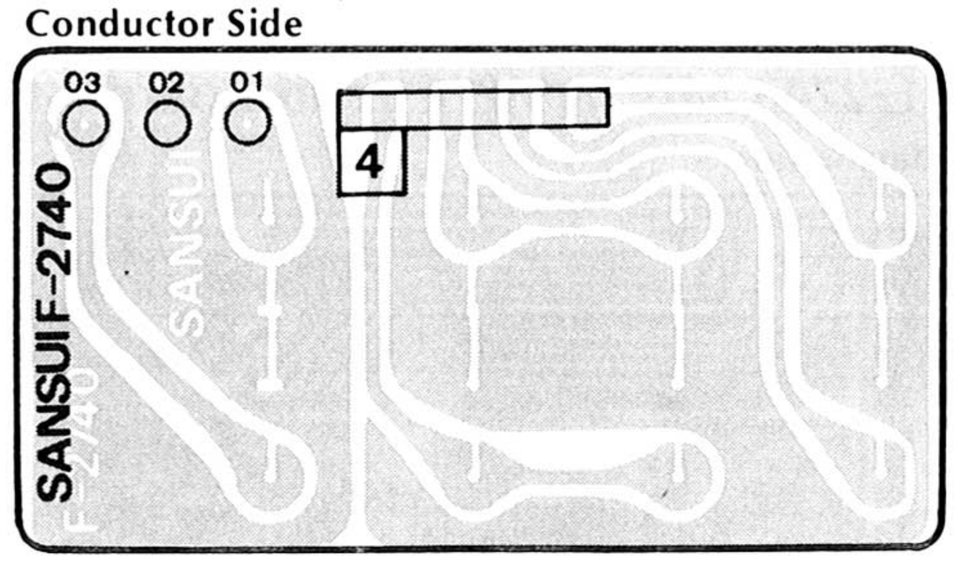

Parts List

Parts No.	Stock No.	Description
	2200480	8P Input & Output Terminal

11) F-2741 Tape Jack Circuit Board (Stock No. 7595511)

Conductor Side

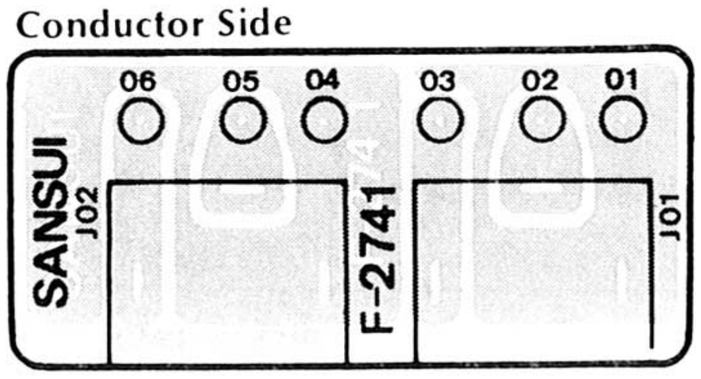

Parts List

Parts No.	Stock No.	Description	
J01, 02	2430290	S-G7720	Jack

12) F-2744 Input Selector Circuit Board (Stock No. 7595531)

Conductor Side

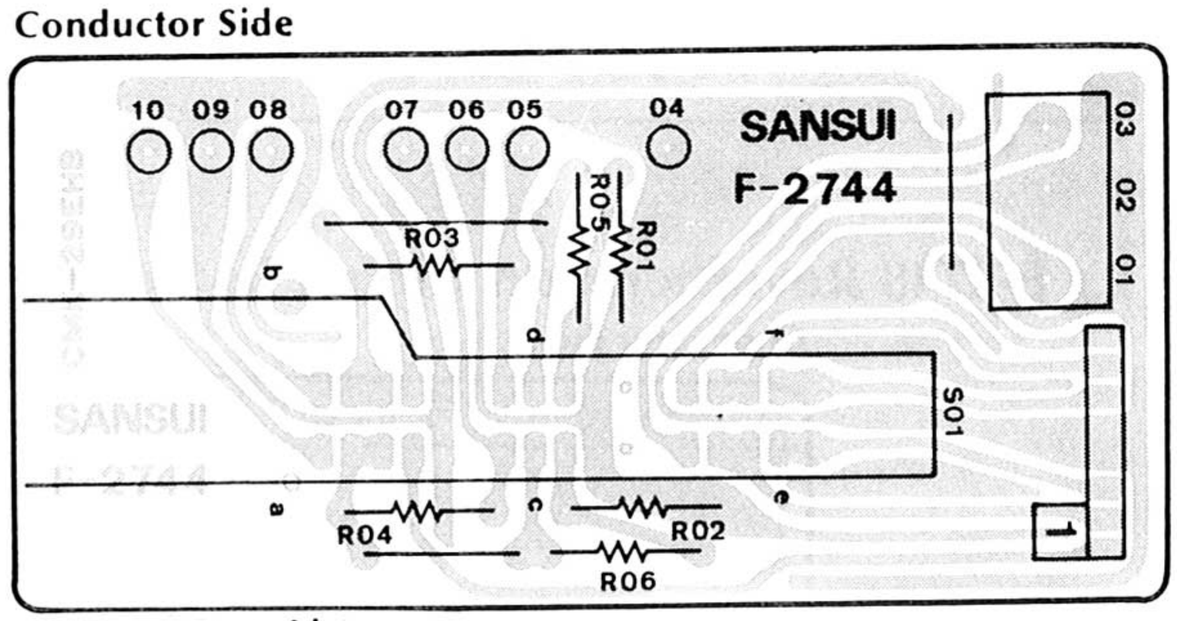

Parts List

Parts No.	Stock No.	Description
	2200490	12P Input & Output Terminal

13) F-2742 Tape Input & Output Circuit Board (Stock No. 7595521)

Conductor Side

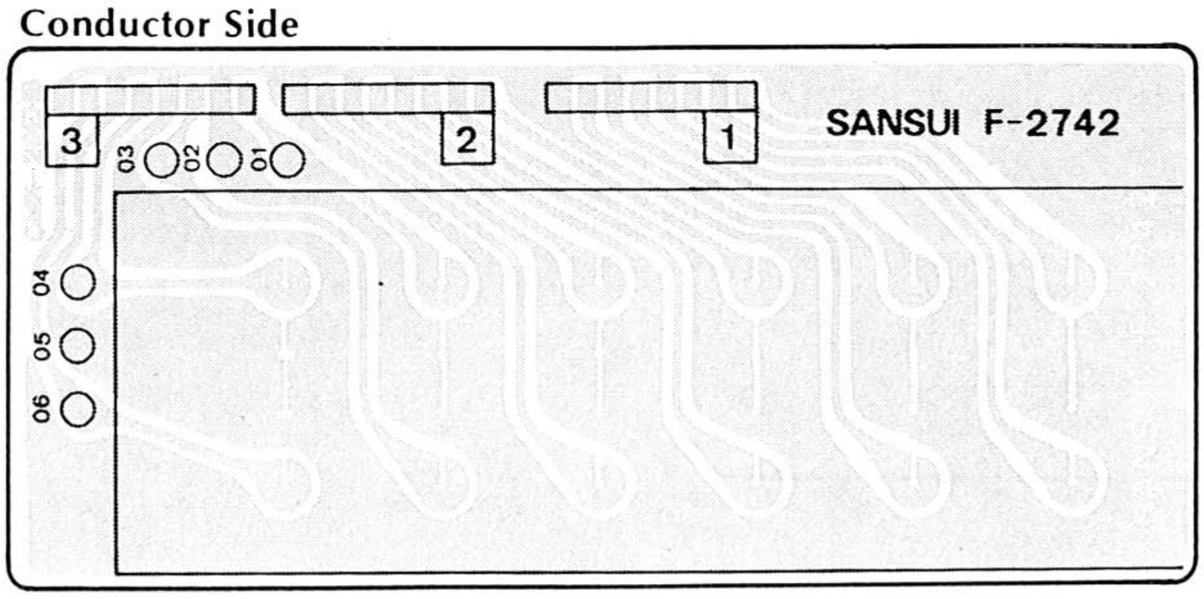

Parts List

Parts No.	Stock No.	Description
S01	1190470	Input Selector Switch
	2410920	Type E 3P Pin Ass'y

●Figures

Connectors & Pin Ass'y

Connectors

Type A (3~10 pins)

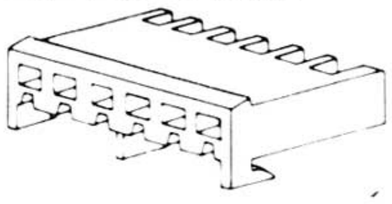

Type B (2~6 pins)

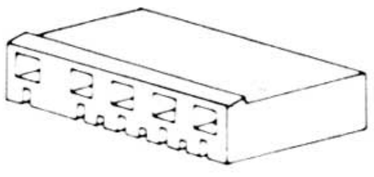

	Stock No
2 Pins	2420450
3 Pins	2420460
3 Pins(RED)	2420650
4 Pins	2420470
5 Pins	2420480
6 Pins	2420490

NOTE: Since stock number of famale connectors (type B) with wires are not shown in each parts list of Complete circuit board, please refer to the above parts list when ordering the connector.

Pin Ass'y

Type A (3~10 pins)

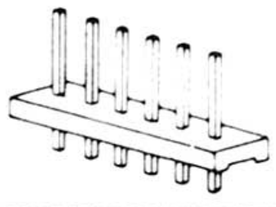

Type B (3~10 pins)

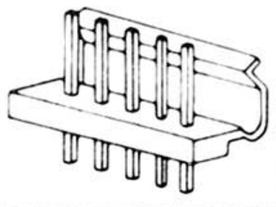

Type C (3~10 pins)

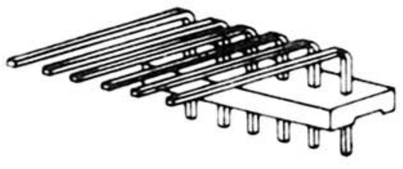

Type D (2~6 pins)

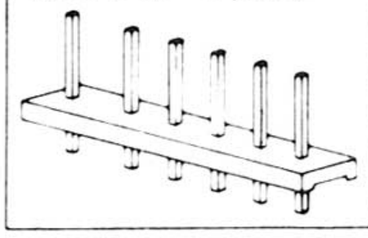

Type E (2~6 pins)

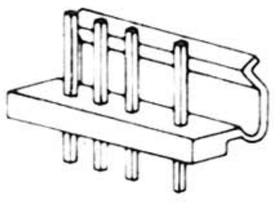

Type F (2~6 pins)

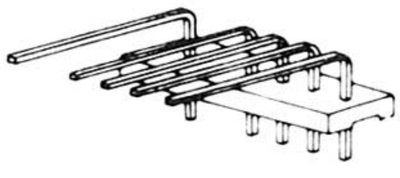

www.hifiengine.com

* La présentation et les spécifications sont susceptibles d'êter modifiées sans préavis par suites d'améliorations éventuelles.
* Änderungen, die dem technischen Fortschritt dienen, bleiben vorbehalten.
* Design and specifications subject to change without notice for improvements.

5. SCHEMATIC DIAGRAM

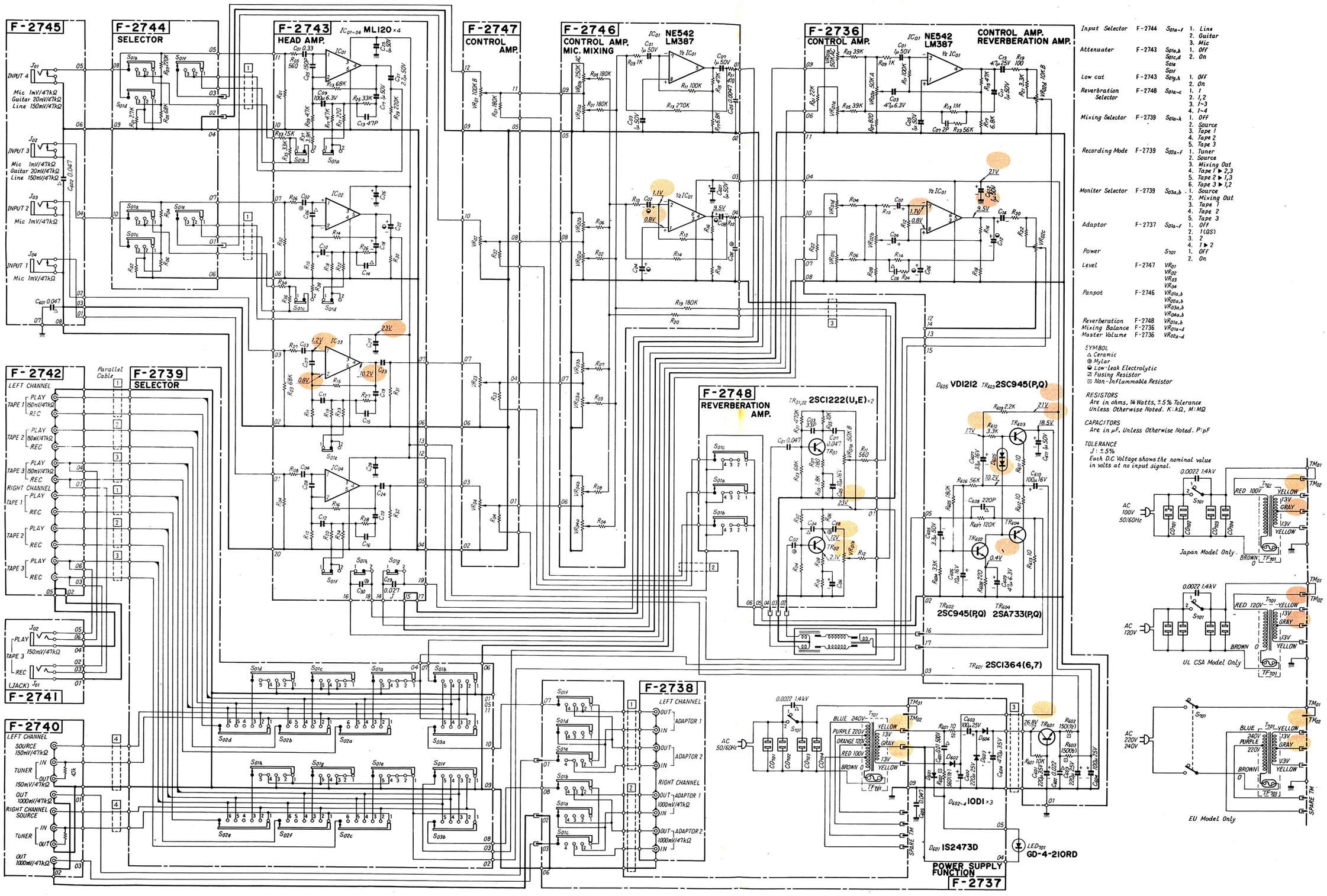

Input Selector	F-2744	S_{01a-f}	1. Line 2. Guitar 3. Mic
Attenuater	F-2743	$S_{01a,b}$ $S_{01c,d}$ S_{01e} S_{01f}	1. Off 2. On
Low cut	F-2743	$S_{01g,h}$	1. Off 2. On
Reverbration Selector	F-2748	S_{01a-c}	1. 1 2. 1,2 3. 1~3 4. 1~4
Mixing Selector	F-2739	S_{01a-h}	1. Off 2. Source 3. Tape 1 4. Tape 2 5. Tape 3
Recording Mode	F-2739	S_{02a-f}	1. Tuner 2. Source 3. Mixing Out 4. Tape 1 ▶ 2,3 5. Tape 2 ▶ 1,3 6. Tape 3 ▶ 1,2
Moniter Selector	F-2739	$S_{03a,b}$	1. Source 2. Mixing Out 3. Tape 1 4. Tape 2 5. Tape 3
Adaptor	F-2737	S_{01a-f}	1. Off 2. 1(QS) 3. 2 4. 1 ▶ 2
Power		S_{701}	1. Off 2. On
Level	F-2747	VR_{01} VR_{02} VR_{03} VR_{04}	
Panpot	F-2746	$VR_{01a,b}$ $VR_{02a,b}$ $VR_{03a,b}$ $VR_{04a,b}$	
Reverberation	F-2748	$VR_{01a,b}$	
Mixing Balance	F-2736	VR_{01a-d}	
Master Volume	F-2736	VR_{02a-d}	

SYMBOL
△ Ceramic
◎ Mylar
◒ Low-Leak Electrolytic
⊠ Fusing Resistor
⊡ Non-Inflammable Resistor

RESISTORS
Are in ohms, ¼ Watts, ±5% Tolerance
Unless Otherwise Noted. K:kΩ, M:MΩ

CAPACITORS
Are in μF, Unless Otherwise Noted. P:pF

TOLERANCE
J: ±5%
Each D.C Voltage shows the nominal value in volts at no input signal.

6. OTHER PARTS

Top View

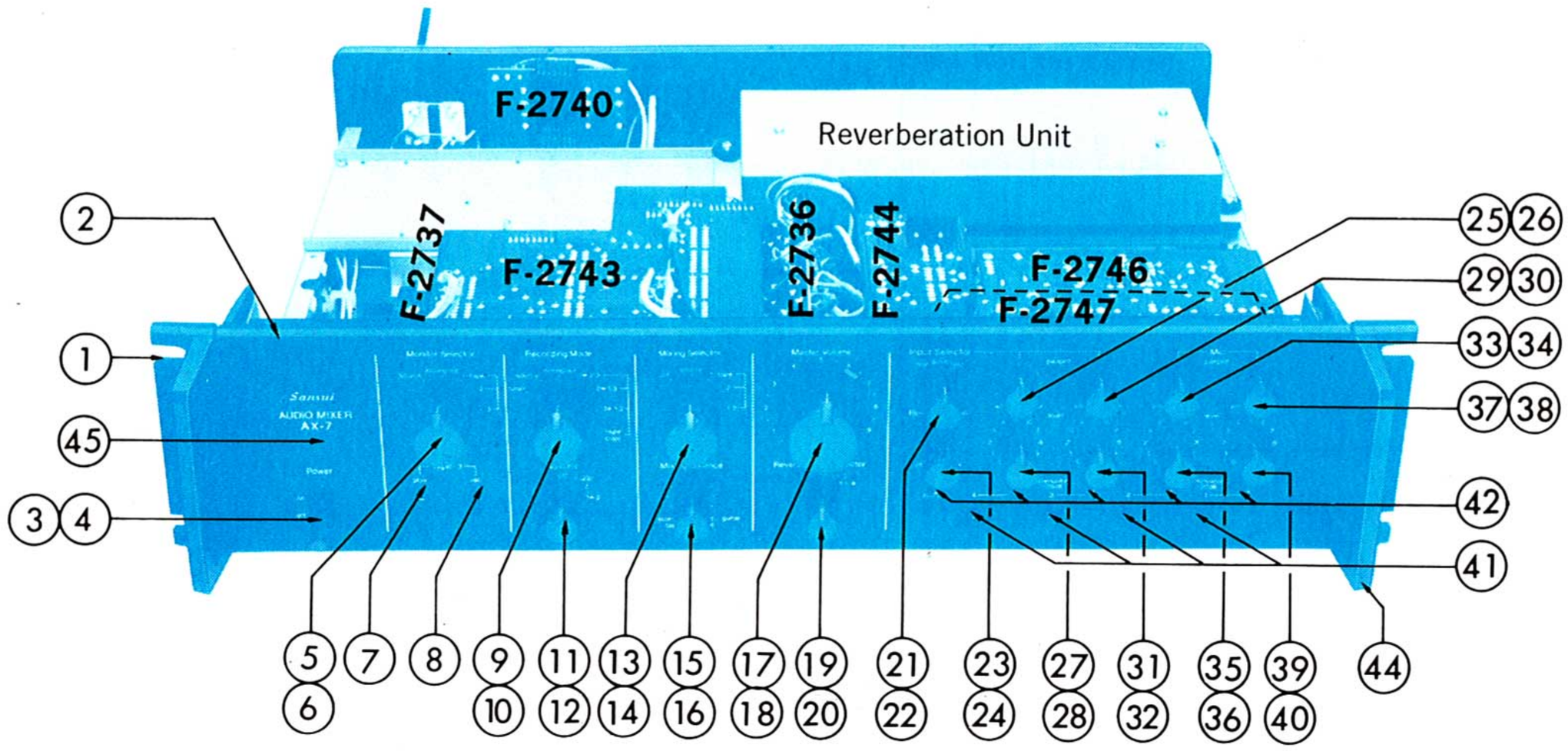

Bottom View

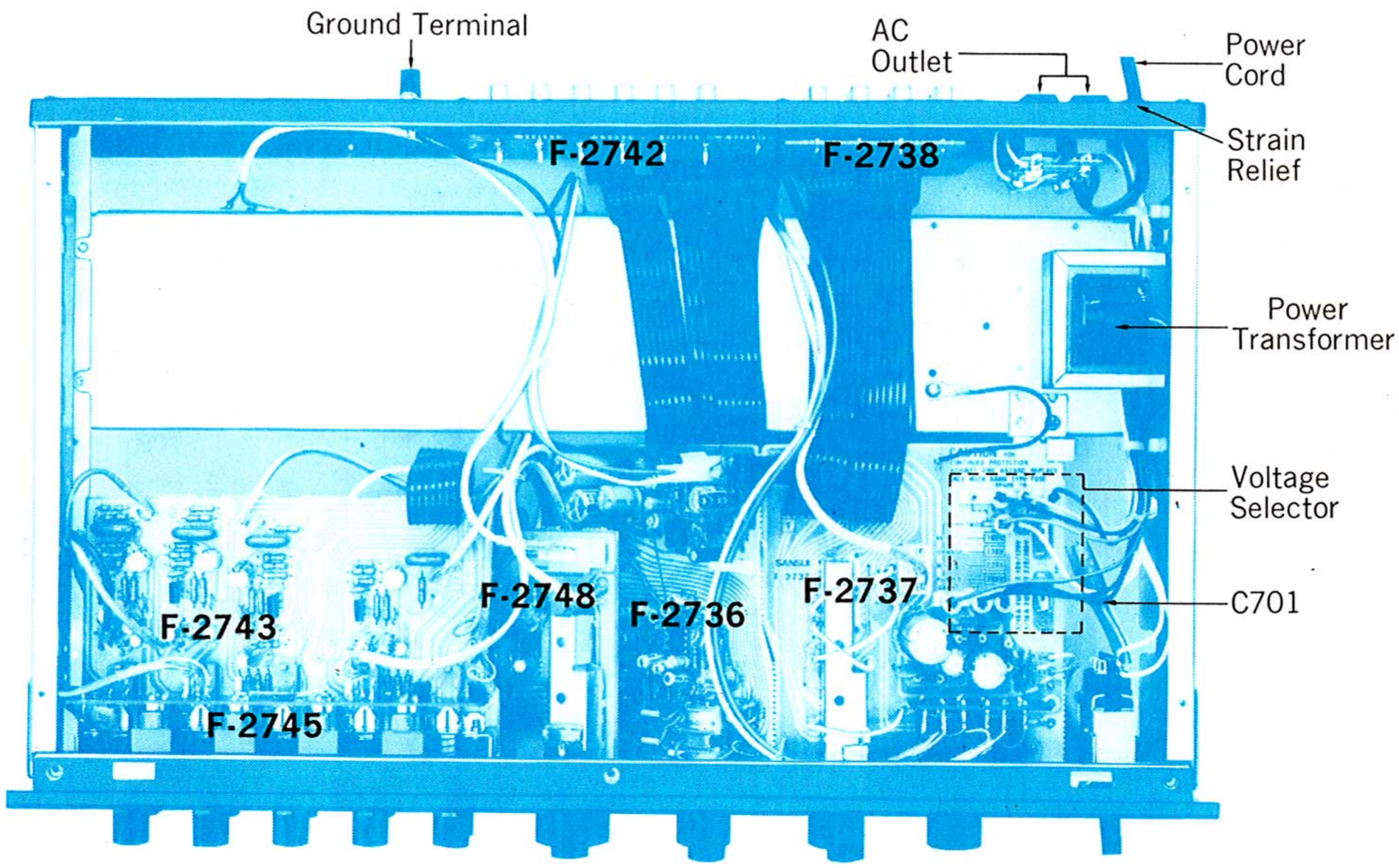

Parts List

Parts No.	Stock No.	Description
1	5396350	Rack Mounting Adaptor
2	7007690	Front Panel Ass'y
(45)	0319120	LED GD-4-210RD
	5288930	Knob Guide
	5305860	Front Panel
(42)	5326640	Push Knob
	5336680	Sansui Mark
	6906480	Spring
3	1171640	Power Switch
4	5326611	Knob, power Switch
5	1190460	Monitor Selector Switch
6	5318930	Knob, Monitor Selector
7	2430290	Tape Play Jack
8	2430290	Tape Rec Jack
9	1190490	Recording Mode Switch
10	5318930	Knob, recording mode switch
11	1190480	Adaptor Switch
12	5318940	Knob, adaptor switch
13	1190500	Mixing Selector Switch
14	5318930	Knob, mixing selector
15	1065070	Mixing Balance Volume, 50 kΩA C x 2
16	5318940	Knob, mixing balance switch
17	1060470	Master Volume, 50 kΩA x 2 + 10 kΩB x 2
18	5318920	Knob, master volume
19	1190450	Reverberation Selector Switch
20	5318940	Knob, reverberation selector
21	1190470	Input Selector Switch
22	5318940	Knob, input selector
23	1015290, 1	Reverberation Volume, 50 kΩB x 2
24	5318940	Knob, reverberation volume
25	1015280	Panpot Volume (Mic 4), 250 kΩ AC
26	5318950	Knob, Panpot Switch
27	1005320, 1	Level Volume (Mic 4), 100 kΩ B
28	5318940	Knob, level volume
29	1015280	Panpot Volume (Mic 3), 250 kΩ AC
30	5318950	Knob, panpot volume
31	1005320	Level Volume (Mic 3), 100 kΩ B
32	5318940	Knob, level volume
33	1015280	Mic Panpot Volume (Mic 2), 250 kΩ AC
34	5318950	Knob, mic panpot
35	1005320, 1	Mic Level Volume (Mic 2), 100 kΩ B
36	5318940	Knob, mic level volume
37	1015180	Mic Panpot Volume (Mic 1), 250 kΩ AC
38	5318950	Knob, mic panpot
39	1005320, 1	Mic Level Volume (Mic 1), 100 kΩ B
40	5318940	Knob, mic level volume
41	2430310	Mic Jack
42	1131480	Push Switch
44	5396350	Rack Mounting Adaptor
45	0319120	LED, power indicator
C701	0659803	0.0022 μF 150V C.C.
	4350010	Reverberation Unit
	2230150	Ground Terminal
	2450060	AC Outlet
	3800290	Power Cord
	3910600	Strain Relief
	4002610	Power Transformer
	5058800	Bottom Plate
	5507070	Leg

www.hifiengine.com

7. PACKING LIST

Parts No.	Stock No.	Description
1	9116640	Vinyl Cover
2	9028100	Stylofoam Packing
3	9009800	Carton Case
4	5996080	Curl Stopper

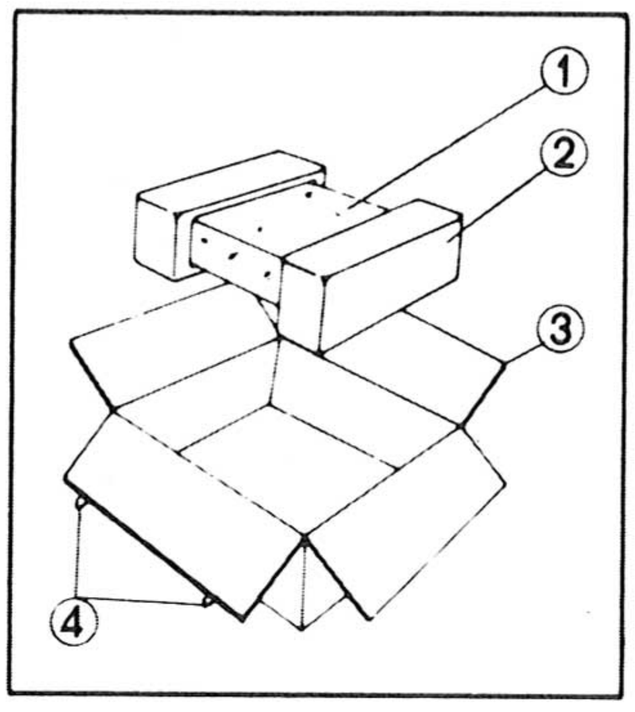

8. ACCESSORY PARTS LIST

Parts No.	Stock No.	Description
	9203180	Operating Instructions
	3810280	PJP Connecting Cord
	5396350	Rack Mounting Adaptor (each)
	9237620	Schematic Diagram

MEMO

Sansui

SANSUI ELECTRONICS CORPORATION: 55-11 Queens Blvd. Woodside, N.Y. 11377 U.S.A.
333 West Alondra Blvd. Gardena, California 90247 U.S.A.
3036 Koapaka St. Honolulu, Hawaii 96819 U.S.A.
SANSUI AUDIO EUROPE N.V.: North Trade Bldg (9th floor) Noorderlaan 133-Bus 1,2030 Antwerp, Belgium
SANSUI AUDIO EUROPE S.A.: Arabella center, 6 Frankfurt AM Main, Lyoner Strasse 44-48, West Germany
SANSUI ELECTRIC COMPANY LTD.: 14-1, Izumi 2-chome, Suginamiku, Tokyo 168 Japan PHONE: (03) 323-1111/TELEX:232-2076

SM087

Printed in Japan (870720M)

www.hifiengine.com